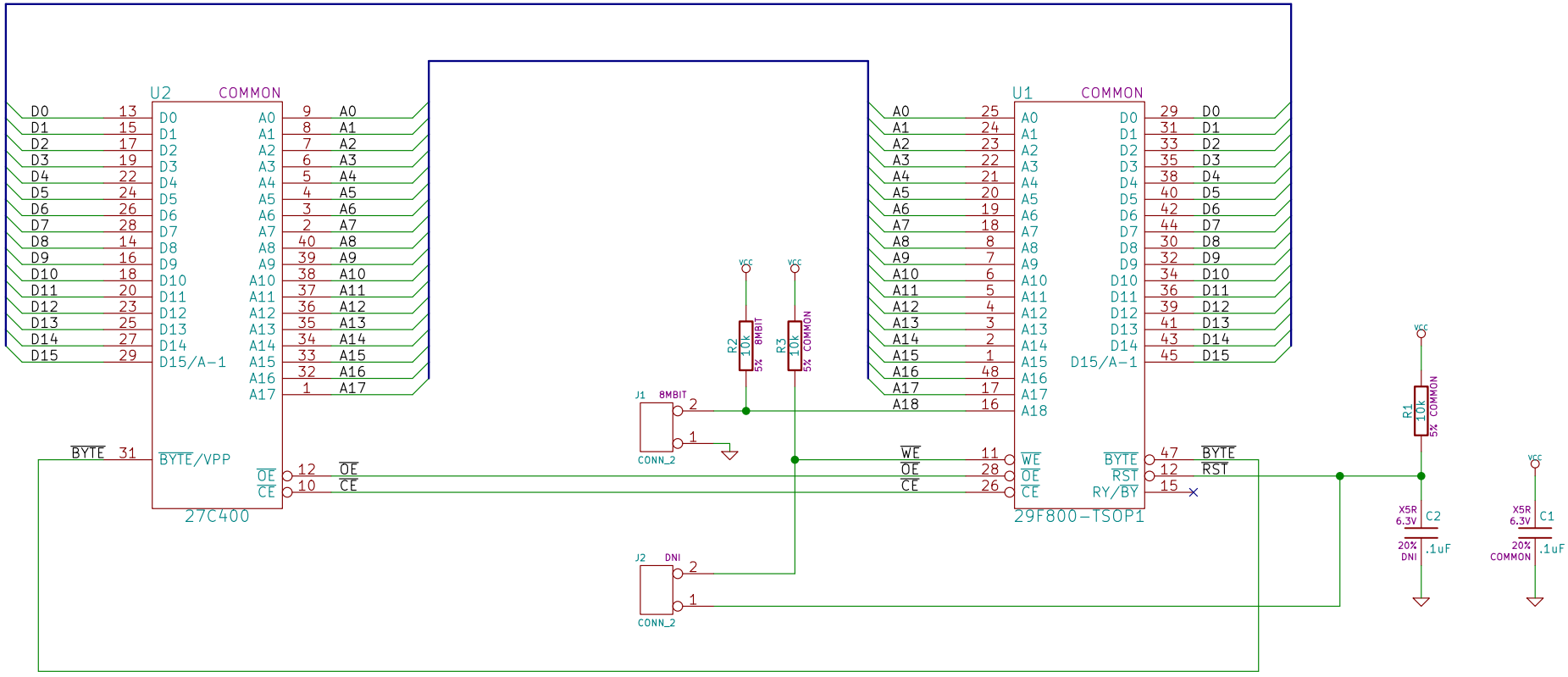

GGLABS	Sheet: /	
	File: F2R16.sch	
	F2R16 – 16-bit FLASH to ROM adapter	
Size: A4	Date: 2016-12-22	**Rev: A00**
KiCad E.D.A. kicad 4.0.2+dfsg1-2bpo8+1-stable		Id: 1/1