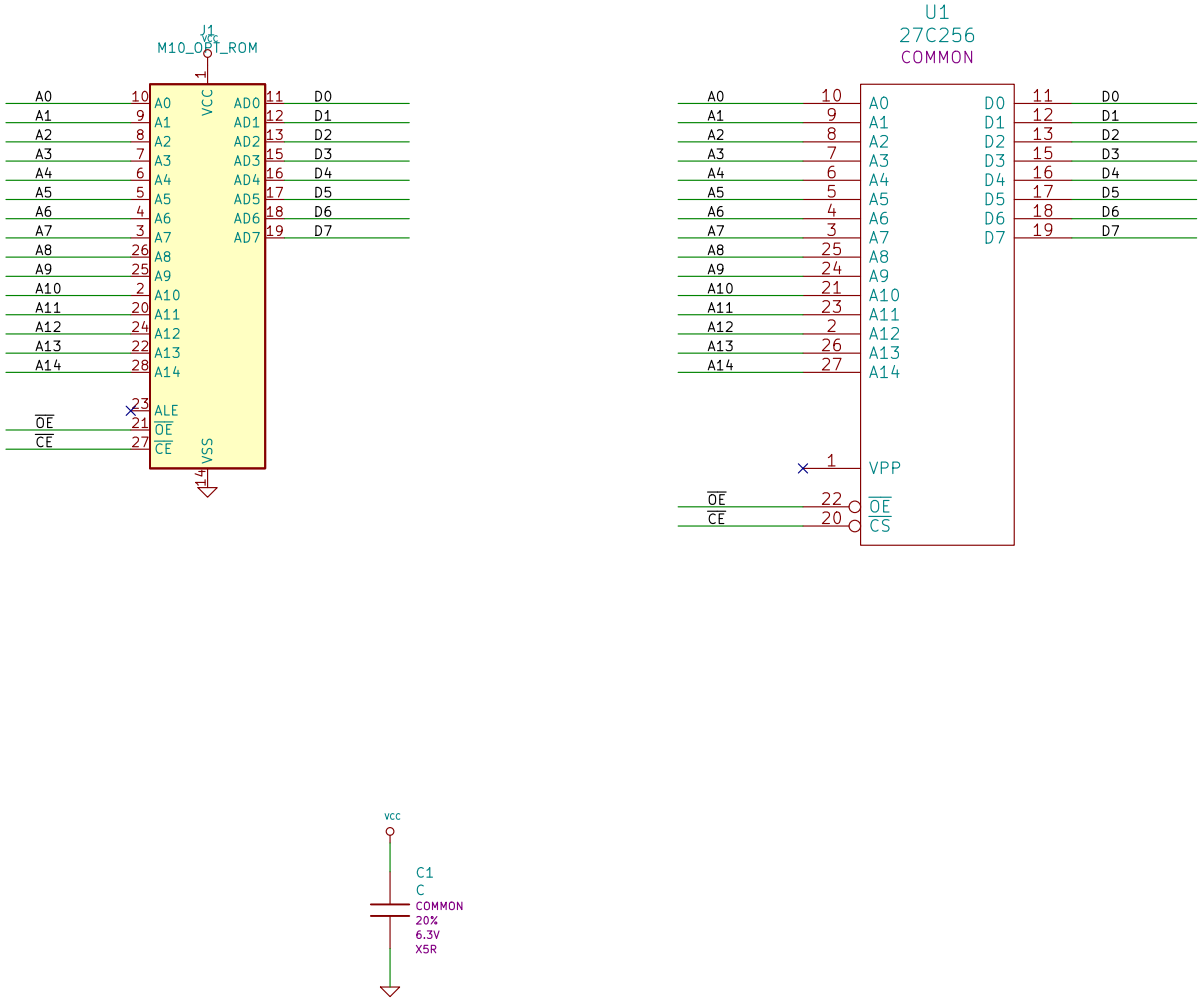

GGLABS	Sheet: / File: M10EPROM.sch	
	Tandy M100/102/200 Option ROM EEPROM	
Size: A4	Date: 2021-05-22	**Rev: A01**
KiCad E.D.A. kicad 5.1.9+dfsg1-1		Id: 1/1