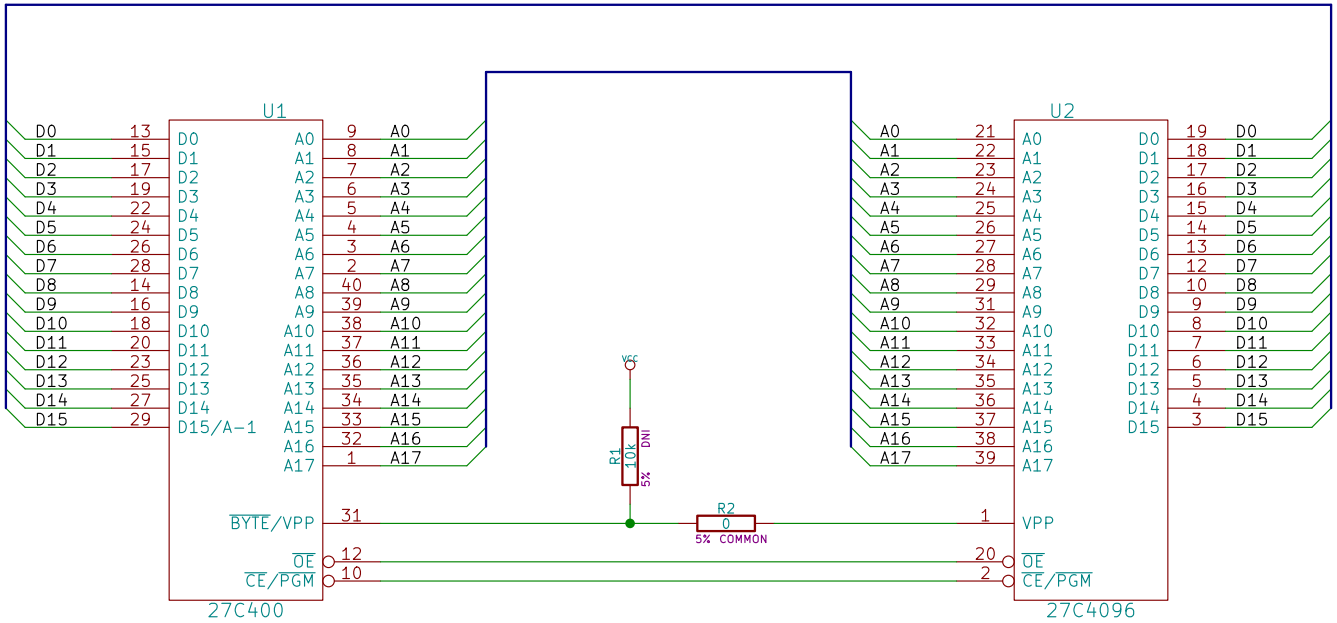

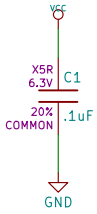

GGLABS	Sheet: / File: e2r16.sch	
	E2R – 16-bit EPROM to ROM adapter	
Size: A4	Date: 2015-10-09	**Rev: A00**
KiCad E.D.A. kicad 4.0.5+dfsg1-4bpo8+1		Id: 1/1