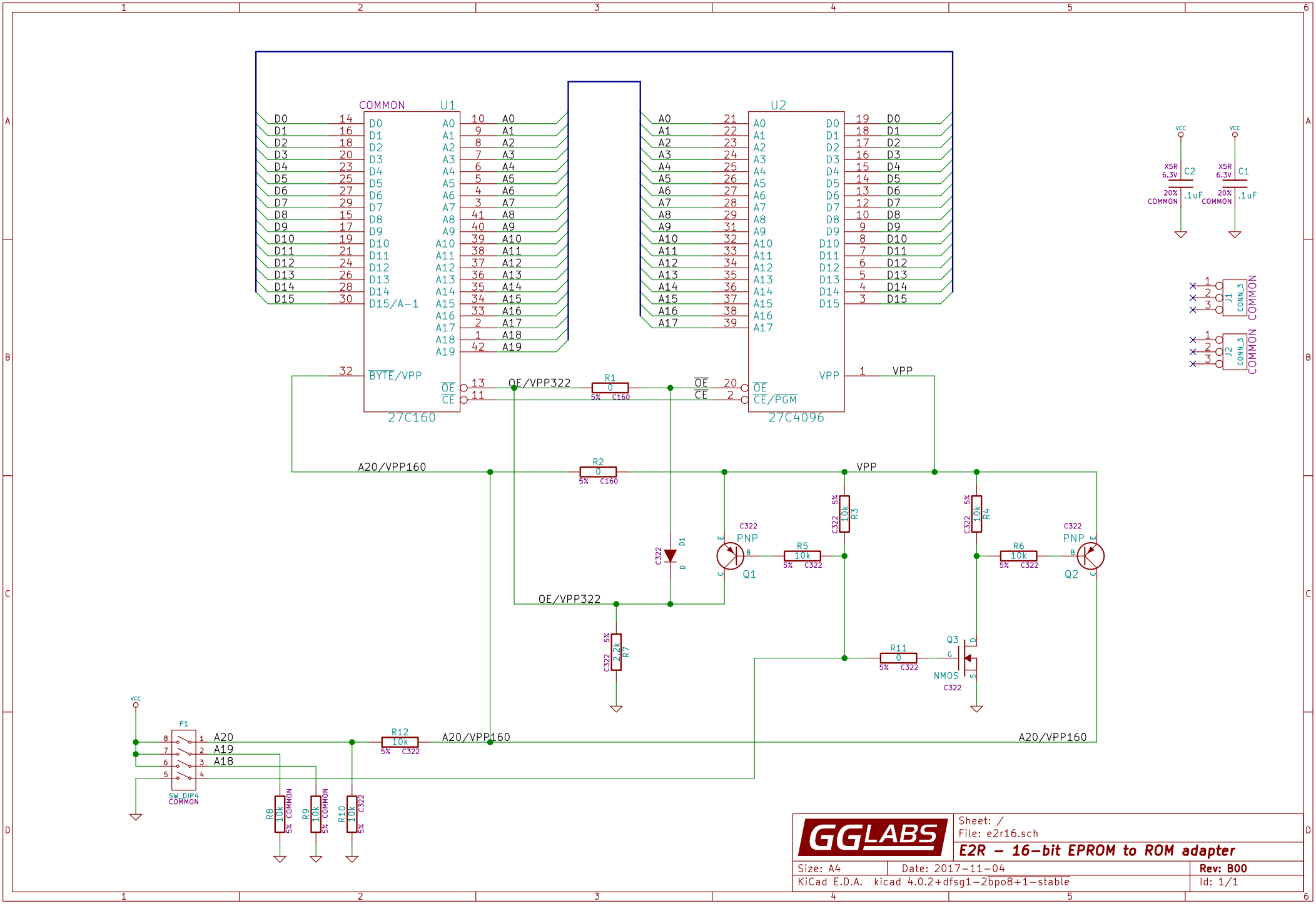
COMMON
U1
27C160
U2
27C4096
BYTE/VPP
OE
CE
CE/PGM
VPP
OE/VPP322
A20/VPP160
R1
R2
R3
R4
R5
R6
R7
R8
R9
R10
R11
R12
Q1
Q2
Q3
PNP
NMOS
D1
P1
SW_DIP4
COMMON
A20
A19
A18
VCC
C1
C2
J1
J2
CONN_3
GGLABS
Sheet: /
File: e2r16.sch
E2R – 16-bit EPROM to ROM adapter
Size: A4
Date: 2017-11-04
Rev: B00
KiCad E.D.A. kicad 4.0.2+dfsg1-2bpo8+1-stable
Id: 1/1