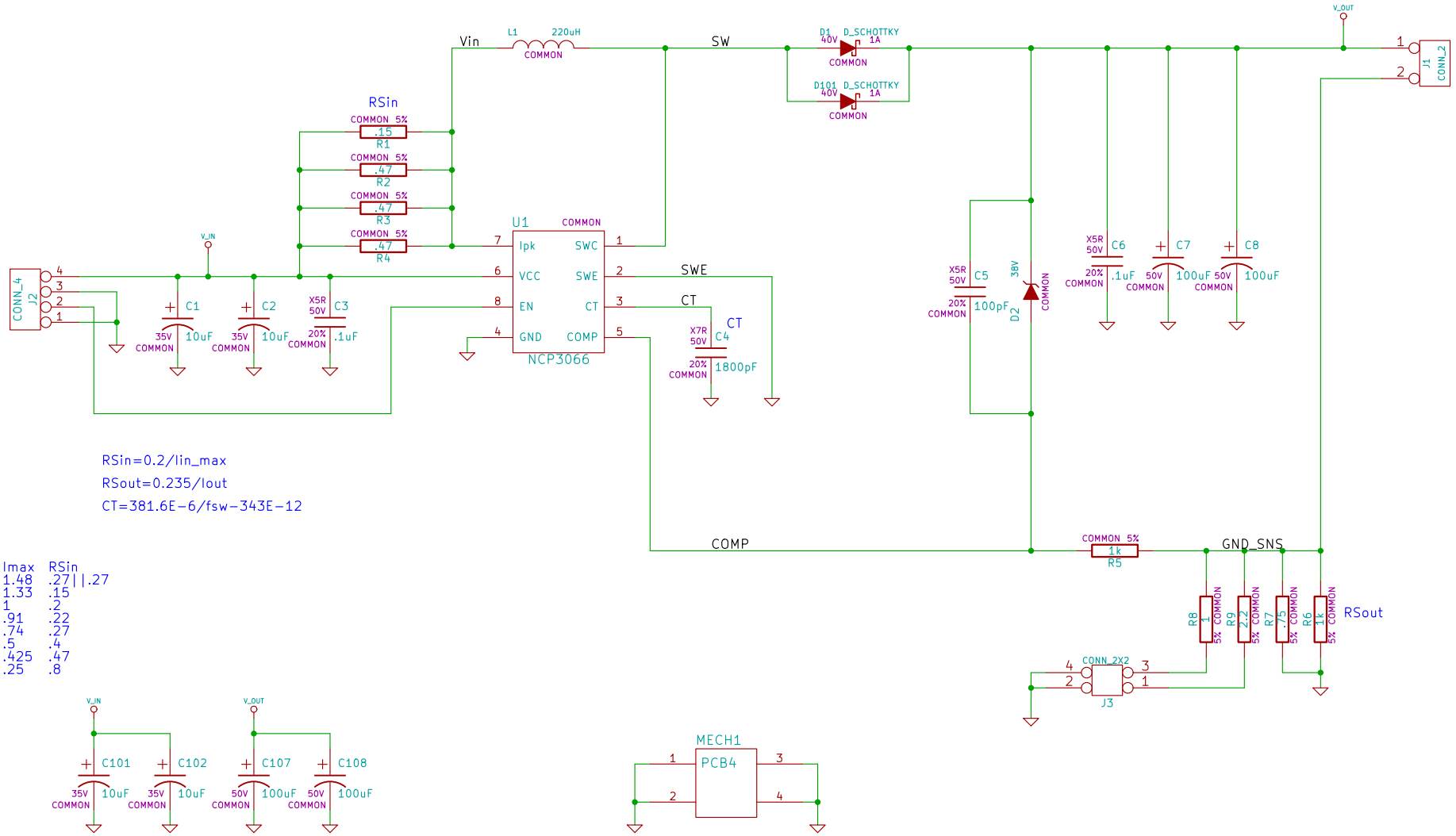

GGLABS		
File: pwr06_no_ext.sch		
Sheet: /		
Title: GLED1 – 10W Boost mode LED driver		
Size: A4	**Date: 22 sep 2014**	**Rev: A00**
KiCad E.D.A.		Id: 1/1