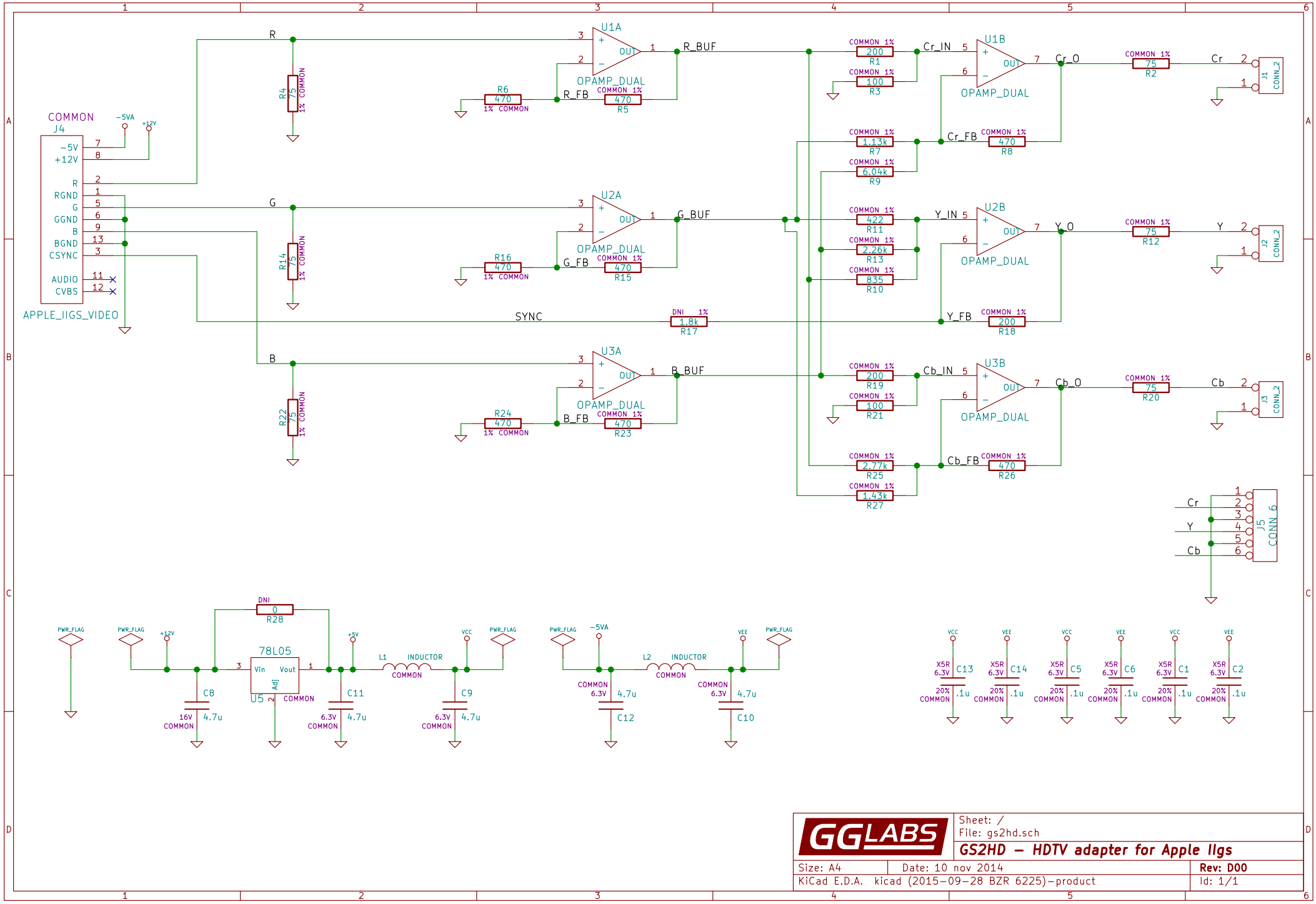

GGLABS	Sheet: /	
	File: gs2hd.sch	
	GS2HD – HDTV adapter for Apple IIgs	
Size: A4	Date: 10 nov 2014	**Rev: D00**
KiCad E.D.A. kicad (2015-09-28 BZR 6225)-product		Id: 1/1