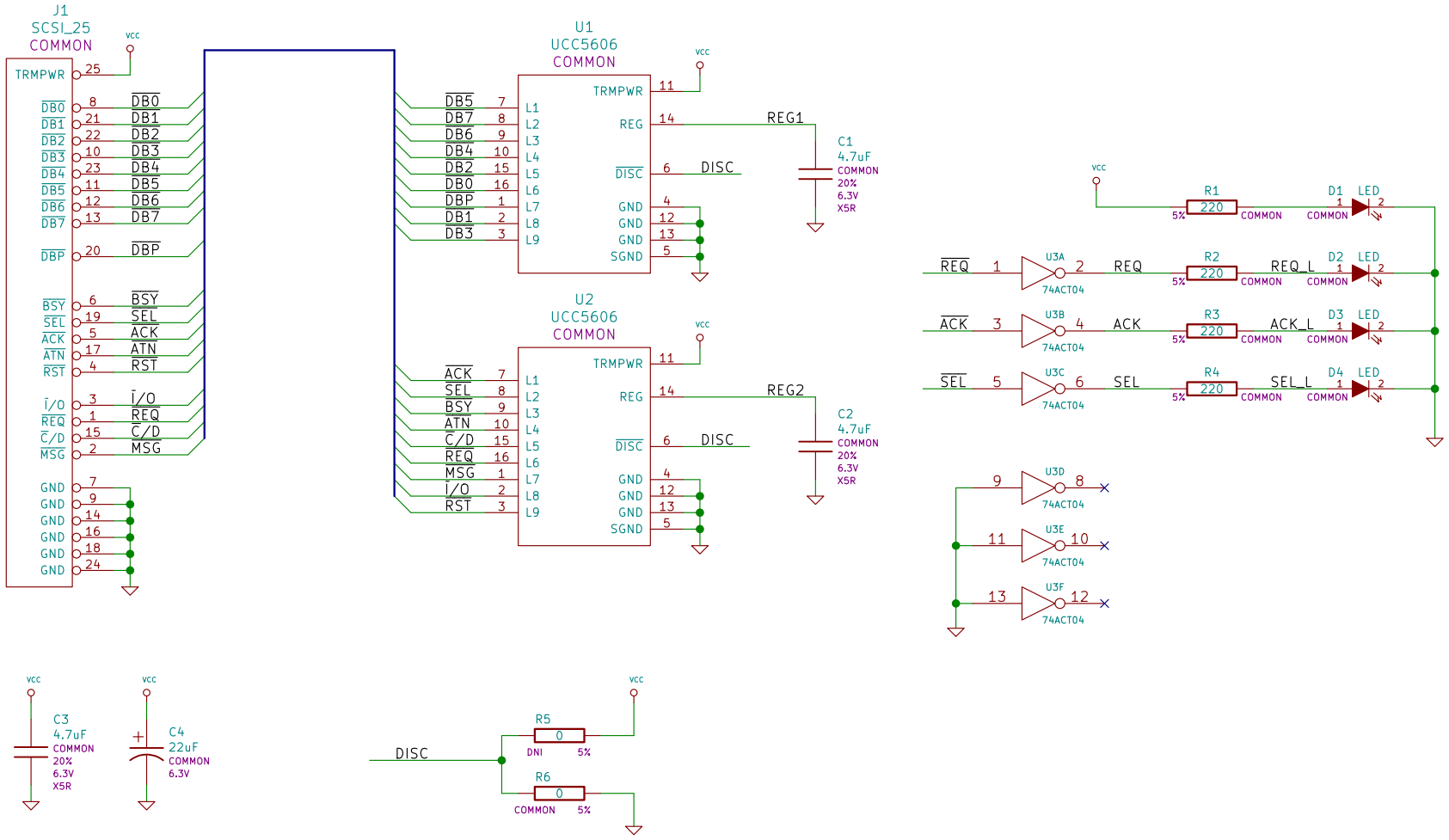

GGLABS

Sheet: /
File: scsiterm.sch

SCSITERM – SCSI terminator with monitor

Size: A4	Date: 2016-08-21	Rev:
KiCad E.D.A. kicad (2016-08-20 BZR 7083)-product		Id: 1/1